Installing and Maintaining Crashworthy Work Zone Traffic Control Devices

February 2018

Work Zone Safety Consortium

This material is based upon work supported by the Federal Highway Administration Grant Agreement DTFH61 13 H 00025

This material is based upon work supported by the Federal Highway Administration under Grant Agreement No. DTFH61-13-H-00025. Any opinions, findings and conclusions or recommendations expressed in this publication are those of the author(s) and do not necessarily reflect the view of the Federal Highway Administration. This publication does not constitute a national standard, specification, or regulation. No statement made in this booklet should be construed to convey an impression that any member of the consortium, its affiliates, or employees have assumed any part of the employer's exclusive legal responsibility for providing a "safe and healthful workplace" as mandated by the Occupational Safety and Health Act. Nor does mention of trade names, commercial products, or organizations imply endorsement by the U.S. Government.

Installing and Maintaining Crashworthy Work Zone Traffic Control Devices

Preface

A variety of traffic control devices are used to control and guide motorists approaching and traveling through a work zone. Ensuring that these devices are crashworthy is critical to the safety of both the motoring public and to the roadway workers who are on or near the roadway performing the necessary work. These devices must be properly installed and maintained in the field over the duration of the work zone to ensure that they will perform as designed if impacted by an errant vehicle.

Objectives

This document explains basic concepts and criteria regarding work zone device crashworthiness for field personnel. Information is provided on items to ensure various work zone devices typically used are indeed crashworthy. Resources are provided at the end of this document for more specific information regarding crashworthy work zone traffic control devices. Examples of improper installation or repairs to devices are highlighted, along with an explanation of why they are not crashworthy.

Crashworthiness Goals of Work Zone Devices

Generally speaking, crashworthy work zone devices:

- contain or redirect vehicles from impacting a hazardous feature;
- decelerate an impacting vehicle gradually; and/or
- break away, fracture, or otherwise yield if impacted.

These effects are accomplished without causing serious injuries to vehicle occupants, other motorists, pedestrians/bicyclists, or work zone personnel.

How Work Zone Devices Meet These Goals

Different work zone devices meet crashworthiness requirements in different ways. Understanding how these devices are supposed to function allows field personnel to make sure they are properly installed and maintained throughout the duration of a work zone.

Traffic Barriers

Barriers that contain or redirect errant vehicles are installed to separate traffic from the work activity area. Portable concrete barriers (PCBs) are the most common type of barrier used in work zones. Sections of PCB typically vary between 10 and 20 feet, and are joined together with an approved connection method to create enough weight and strength to withstand an errant vehicle impact. The total length of barrier needed to successfully contain and redirect an errant vehicle has generally ranged between 140 and 270 feet. In some cases, the total length of PCB is anchored to the pavement; in other cases, the barrier is unanchored and simply rests on the pavement. In either case the integrity of the connections from one barrier segment to another must be maintained.

Unanchored barrier, although quite heavy, can still deflect up to 6 feet into the work space when impacted if not anchored (properly anchored PCB typically deflects less than 1 foot). In some work zones, this amount of deflection is acceptable. However, in locations where the barrier is positioned right next to the edge of a bridge or large drop-off, or where workers and equipment must work immediately next to the barrier, such a deflection could allow the errant vehicle and barrier to fall off the bridge or pavement edge if impacted, or could crush a

worker between the barrier and another hazard (see Figure 1). When installing PCB on a project, it is important to remember to check whether or not the barrier is to be anchored, and if so, to utilize correct anchors and anchoring techniques such as those shown in Figure 2. Furthermore, the project engineer should be consulted before installing unanchored PCB if there is not at least 6 feet of available deflection distance immediately adjacent to the barrier.

Figure 1. PCB knocked off pavement edge due to insufficient connections and anchoring *(source: TTI)*

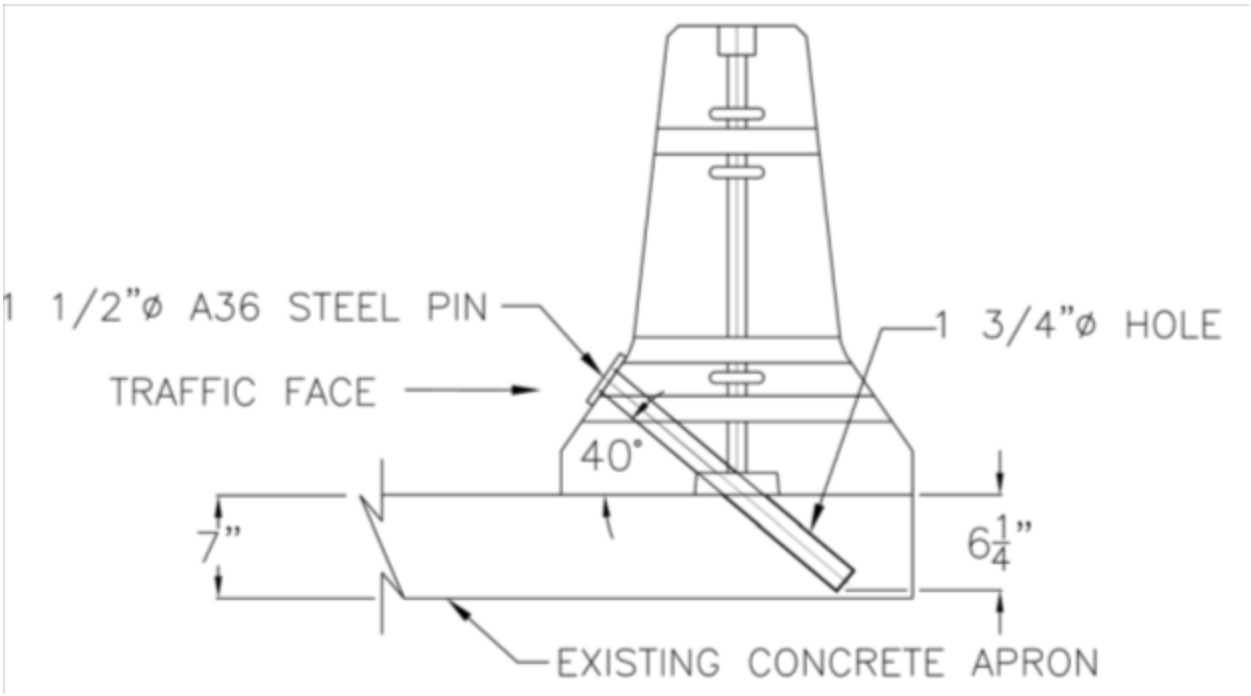

(source: Texas A&M Transportation Institute (TTI)

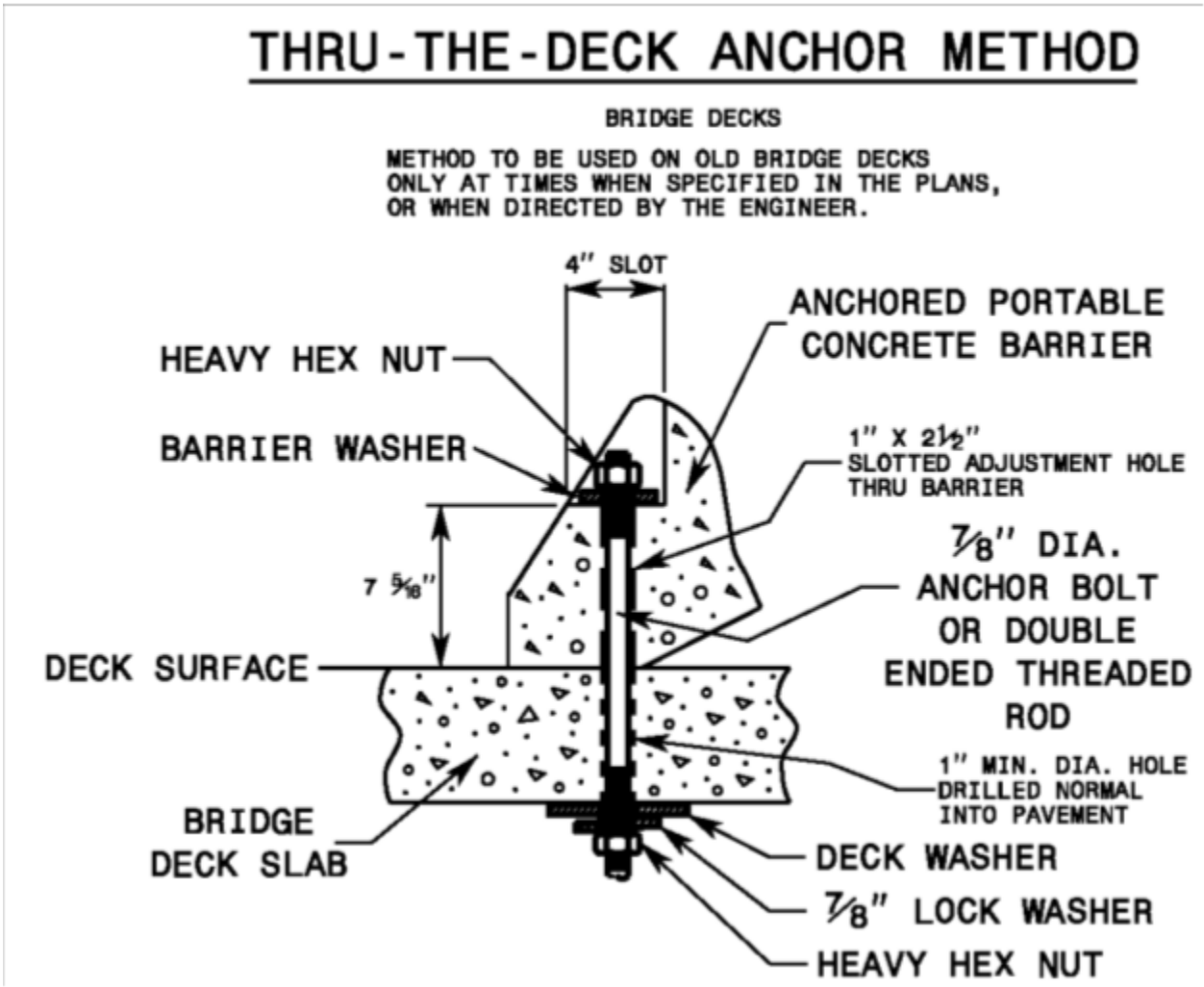

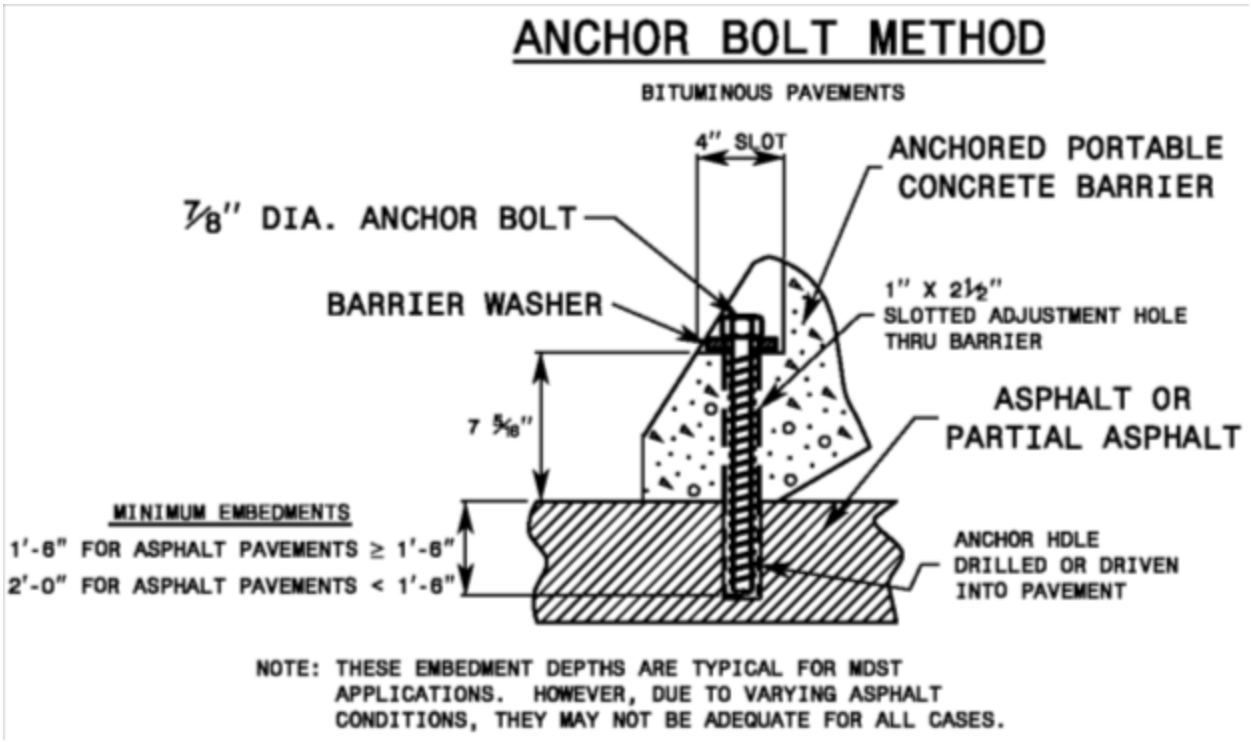

(source: North Carolina Department of Transportation (NCDOT))

Figure 2. Examples of methods of anchoring PCB.

Some agencies allow steel box beams to be attached to the back side of the PCB to increase stiffness and reduce lateral deflection (see Figure 3). In this case, the end sections of the barrier are anchored but the middle sections are not. When stiffened and anchored at the end in this manner, lateral deflection is reduced to only 28 inches when impacted. Care should be taken to follow the specified procedures precisely when anchoring PCB. Many agencies have established standard drawings and specifications regarding connections and anchoring requirements for PCB.

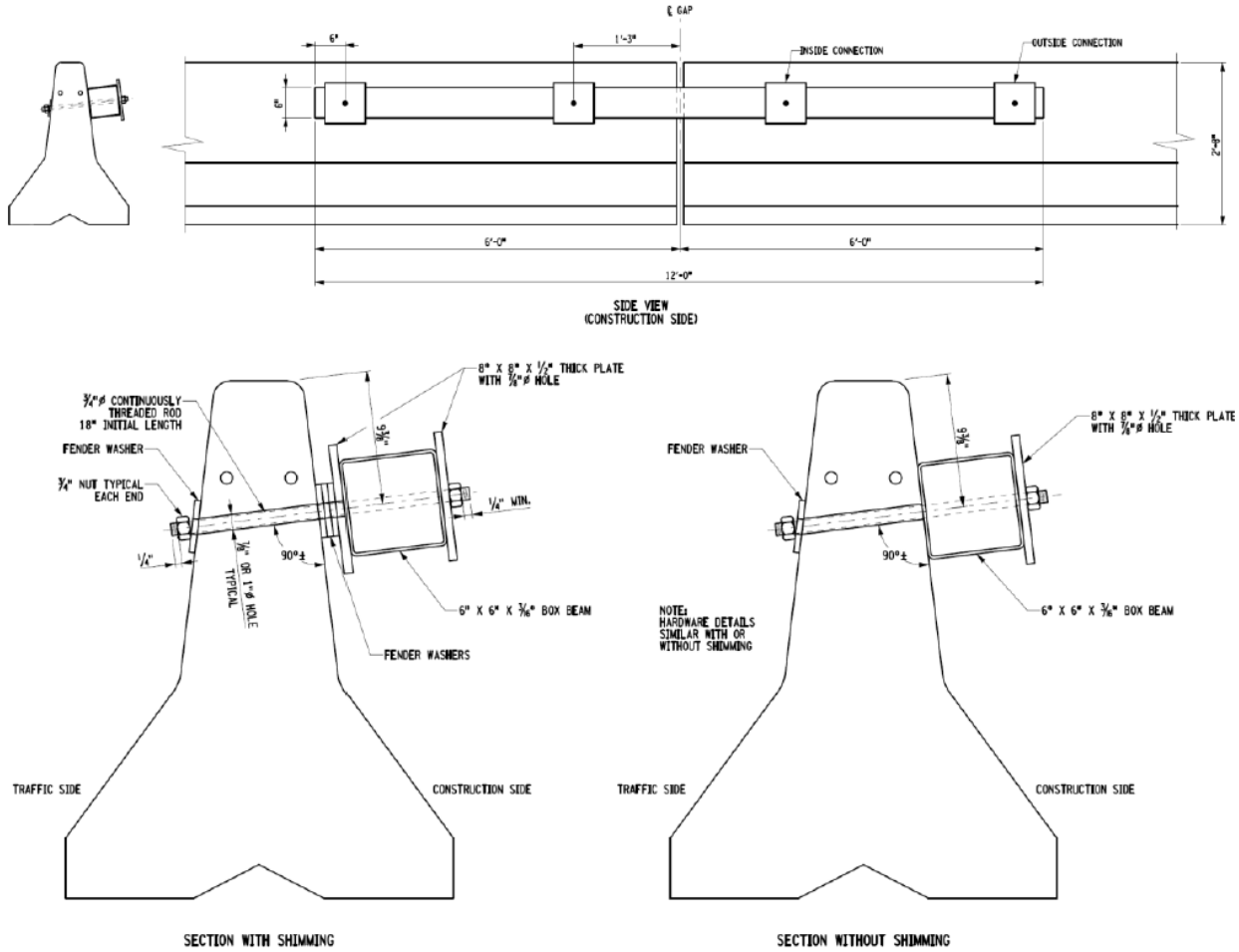

Figure 3. Illustration of use of steel box beam to stiffen PCB connections. *(source: New York State Department of Transportation (NYSDOT))*

In addition to PCB, manufacturers have developed steel and water-filled barriers that are sometimes specified for use on a particular project. These barriers may also be anchored or unanchored. Since these types of barriers weigh significantly less than PCB, they will deflect much more if they are not anchored. Table 1 summarizes some typical deflection distances of PCB, steel, and water-filled barriers. Note that unanchored water-filled barriers can deflect more than 22 feet (nearly two travel lanes) if impacted at 60 mph. Test levels refer to crash test impact speeds, angles, and vehicle types previously defined in National Cooperative Highway Research Program (NCHRP) Report 350, and currently specified in the Manual for Assessing Safety Hardware (MASH) published by the to the American Association of State Highway and Transportation Officials (AASHTO).

Table 1. Typical Lateral Deflections of Work Zone Barriers

Type of Barrier	Anchor Condition for Test Level-3[a] Test	Lateral Deflection upon Impact
Portable Concrete	Unanchored	2.5–6 feet
	Anchored	0.8 feet
Steel	Unanchored	6.3–13.1 feet
	Anchored	0.4–6.3 feet [b]
Water-Filled	Unanchored	11.2–22.6 feet
	Anchored	9 feet
Mobile	Unanchored	2 feet

[a] Test Level-3 test conditions involve small automobile and pickup truck impacts at 62 mph. Impact angles were 20 or 25 degrees under NCHRP 350 criteria, but are now all specified to be 25 degrees under MASH criteria. Consult these documents for additional details regarding specific vehicle size and weights required.

[b] Multiple anchoring options exist for steel barrier. Consult crash test results for specific anchoring details used to obtain lateral deflection distances reported.

Water-filled barriers look similar to devices that are referred to as longitudinal channelizing devices (LCDs) (see Figure 4). Although they look similar, LCDs are not designed to redirect impacting vehicles. LCD manufacturers crash test their products to make sure they are acceptable for use in work zones, but those tests only examine whether the device creates a hazard for the motorists, pedestrians, or workers. A vehicle impacting an LCD will simply break through the line of devices. Water-filled barriers have steel and other elements that connect together to create the tensile strengths needed to redirect impacting vehicles. Although some LCD manufacturers refer to their products as “barriers,” these devices must not be used where the intent is to redirect an impacting vehicle and prevent intrusion into the work activity area. Field crews should always check to make sure they are installing the correct type of barrier specified in the project plans.

Water-filled barrier (source: FHWA Office of Safety)

Longitudinal Channelizing Device (source: FHWA Office of Safety)

Figure 4. Example of appearance similarity of water-filled barriers and longitudinal channelizing devices.

Crash Cushions or Impact Attenuators

Properly installed guardrails and barriers redirect errant vehicles that impact them from the side. However, hitting the ends of these devices will result in very serious injuries to vehicle occupants. Crash attenuators are installed in work zones at the end of these guardrails, barriers, or other temporary roadside hazards to protect those errant motorists. Attenuators are also used on shadow vehicles to reduce the severity of rear-end crashes into the shadow vehicle.

Some crash attenuators are designed to be expendable as they are crushed, pierced through (this is called "gating"), or otherwise destroyed upon impact. Other attenuators are more re-usable and are designed to deform and/or redirect an errant vehicle if impacted. Unless one is well trained in attenuator design and functionality, project plans should always be consulted when installing an attenuator in a work zone to make sure the correct one is being used. Manufacturer's installation manuals should always be consulted to make sure the installation meets all requirements.

Other Work Zone Traffic Control Devices

Most signs, channelizing devices, and traffic control devices used in a work zone are relatively light weight and will not cause a vehicle to stop abruptly or affect its trajectory. However, some of these types of devices can break apart when hit by a vehicle. Pieces of the device may crash into and puncture the windshield or roof of the vehicle, potentially injuring/killing the driver and passengers. Pieces of the device may also fly in different directions when hit and present a threat to other nearby motorists, pedestrians, bicyclists, or workers. Several factors affect whether or not a particular work zone device is crashworthy, including:

- Failure mode of the structural members
- Connection details between the members
- Sign substrate material
- Support member material
- Sign panel size
- Sign panel mounting height
- Addition of lights and/or flags to the device
- Use of ballast to keep the device upright and in place

Some devices present more risk to motorists, pedestrians, and workers than others if struck by a vehicle. Rubber or plastic traffic cones, traffic drums, tubular markers, and vertical panels typically do not cause much

risk to anyone if they are hit by a vehicle, as long as they are on a State DOT's approved product list or were constructed according to standard drawings that the agency had approved (i.e., they were not modified in any way). On the other hand, barricades and sign supports can be particularly dangerous if not properly designed and constructed out of the proper materials. Examples of how improperly constructed devices can damage a vehicle and potentially injure persons in or around the vehicle are shown in Figure 5.

Currently, crash tests defined in MASH help engineers determine which devices are crashworthy. Many agencies have approved certain barricade and sign support products that are available for purchase, and/or have developed approved design drawings for constructing crashworthy barricades and sign supports. While it may seem that minor changes to one of these drawings (e.g., bolt or screw sizes used, number of bolts or screws used, whether washers are used, type of material used, etc.) will not reduce crashworthiness, even such minor changes can affect how these devices break apart when hit and thus cause a device to become unsafe. Some devices are designed to remain mostly together when struck and either collapse down in front of the vehicle or vault into the air and land behind the vehicle. Other devices are meant to break into smaller pieces when struck. Still other devices are designed with some components fracturing into smaller pieces and other components yielding or vaulting over the vehicle. In still other instances, the device is designed to be pushed down at low speeds when struck, but be propelled up and over the impacting vehicle when struck at higher speeds. These factors demonstrate the importance of devices being installed in the field in the same manner in which they were crash tested. This is also why it is important not to assume that signs, lights, etc. can simply be added to any device in the field. Rather, someone must first check with the manufacturer or with an engineer who understands work zone device crashworthiness principles and current requirements. Similarly, any repairs made to devices in the field should involve complete replacement of the broken component with the same type component and reattachment in the same manner in which the device was first constructed and successfully tested.

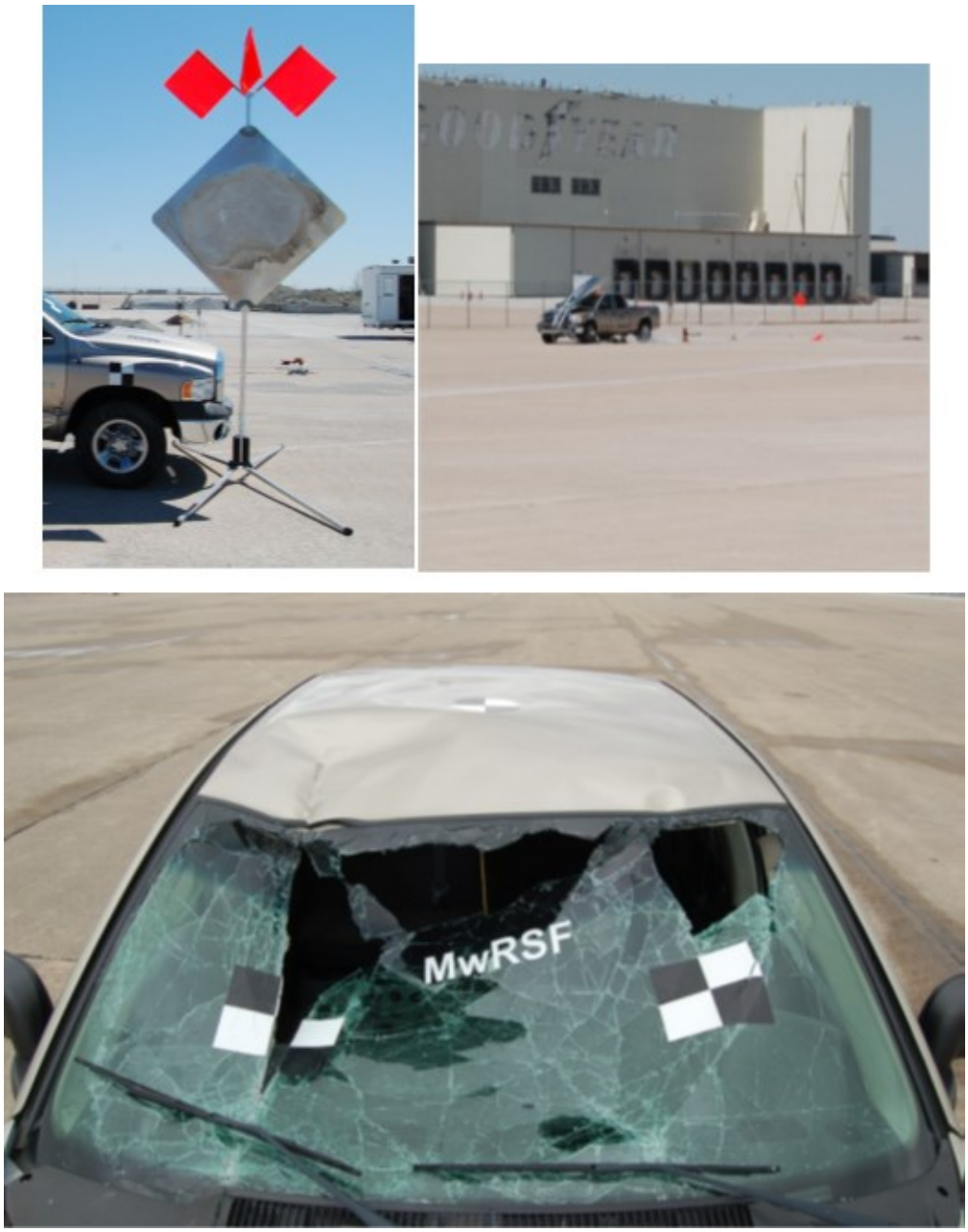

Figure 5. Unsuccessful crash test of a 5-foot temporary sign support *(source: Midwest Roadside Safety Facility).*

Common Work Zone Device Crashworthiness Problems or Mistakes in the Field

Barriers

PCBs are quite durable and often used repeatedly on projects. However, care should be taken to inspect PCB sections before installation and at regular frequencies during its service life. Any sections that have pieces of concrete missing that will allow a vehicle to snag on the barrier if it is hit, or which exposes reinforcing bars in the barrier should be replaced. For example, the Illinois Tollway Authority requires any PCB sections that have spalling, chipping, or delamination greater than 2.5 inches deep with cracks that make the section structurally unsound to be replaced (see Figure 6). Figure 7 illustrates similar examples used by the Minnesota Department of Transportation (MNDOT) as cause for rejection.

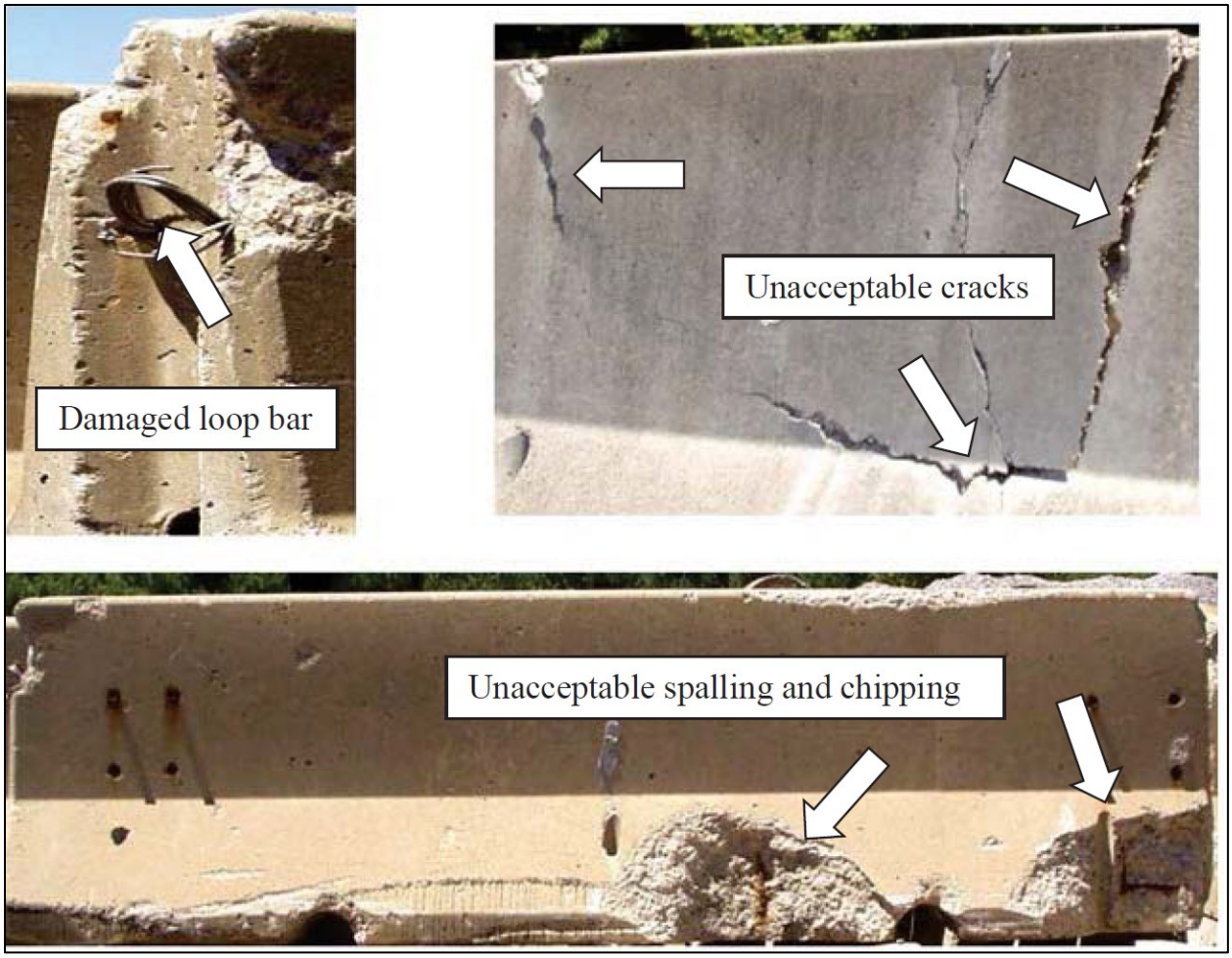

Figure 6. PCB conditions that require replacement *(source: Illinois Tollway Authority)*

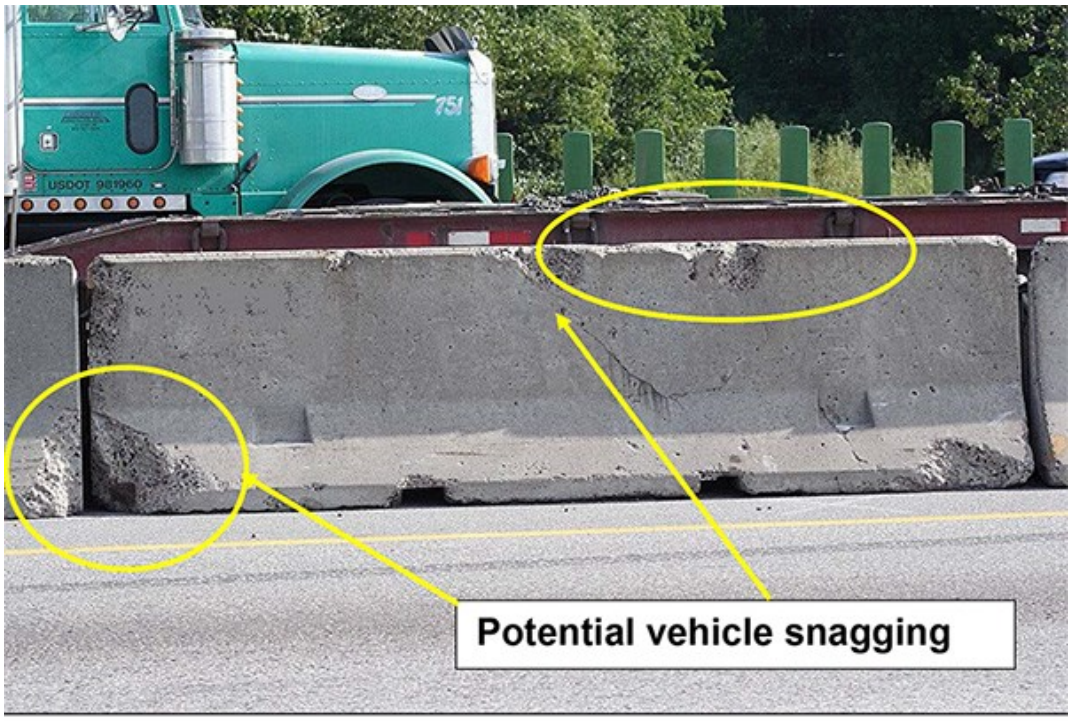

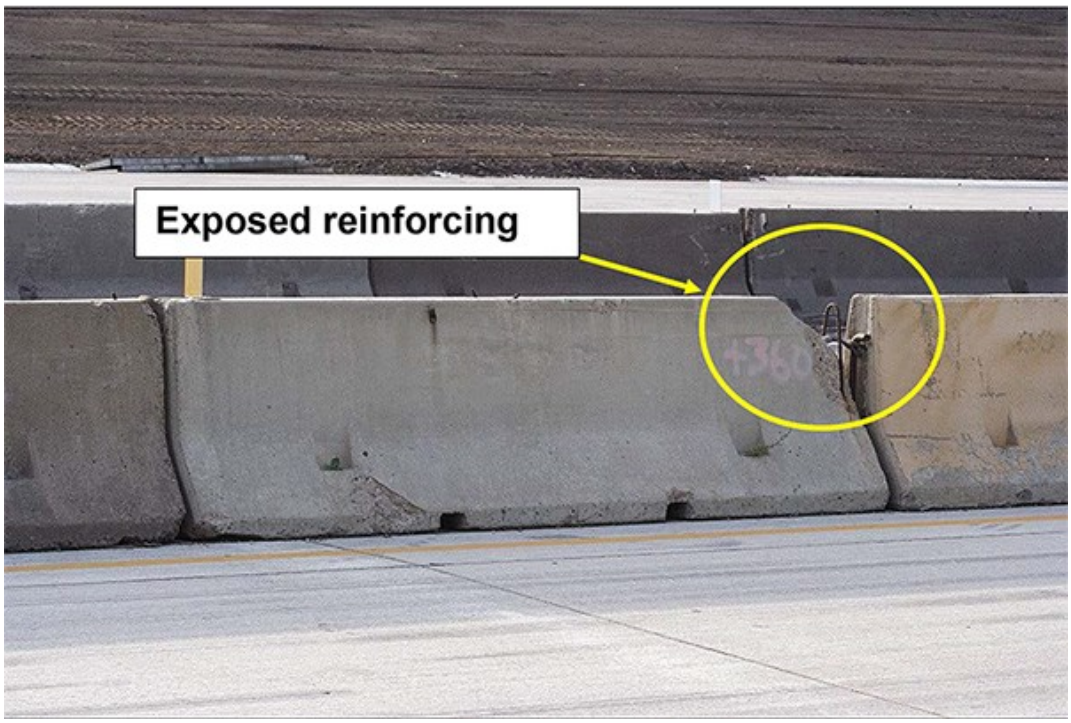

Figure 7. Examples of unacceptable PCB segments *(source: MNDOT)*

Barrier connections should also be installed correctly and checked periodically during a project. Care should be taken to inspect PCB pin connections before installation and at regular intervals, ensuring that the pin nut and washer components are present and that the correct size bolt or pin is used (see Figure 8).

PCB should not be installed with steel channels or angle sections behind them at the base in an attempt to reduce lateral deflections without successful physical crash testing. The non-tested system could cause the barrier to overturn if impacted by a vehicle because the edge of the channel can act as a fulcrum against the barrier.

PCBs must also have crash attenuators installed where needed, and must be correctly connected to bridge railings or other anchored or unanchored barrier. Failure to do so can create a snag point for a vehicle between the barrier and the attenuator (see Figure 9). In addition, care should be taken not to leave materials or debris on the top of the attenuator. Crash tests have shown that these objects can penetrate the windshield of an impacting vehicle.

Finally, the space behind the barrier and crash attenuators should be checked to ensure that the available deflection distance is adequate. The amount of space should exceed the expected lateral deflection distance of the barrier. Remember that unanchored barriers will deflect more than anchored barriers.

A truck- or trailer-mounted attenuator (TMA) is an energy absorbing device designed to bring a vehicle impacting the rear of a shadow vehicle to a controlled stop. The TMA may either be attached directly to rear of the truck (a truck-mounted attenuator) or pulled behind the truck as a trailer (a trailer-mounted attenuator). The TMA should always be matched to a properly-weighted shadow vehicle for that attenuator. While some TMAs can be mounted to pickup trucks, these lighter-weight vehicles may be pushed into the work activity area if impacted from the rear. A heavy dump truck will not move as far, yet will still let the TMA cushion the impact. Care should always be taken to use a shadow vehicle/attenuator combination that is appropriate for the roadway it will be on. The AASHTO Roadside Design Guide provides additional information on the correct use of TMAs.

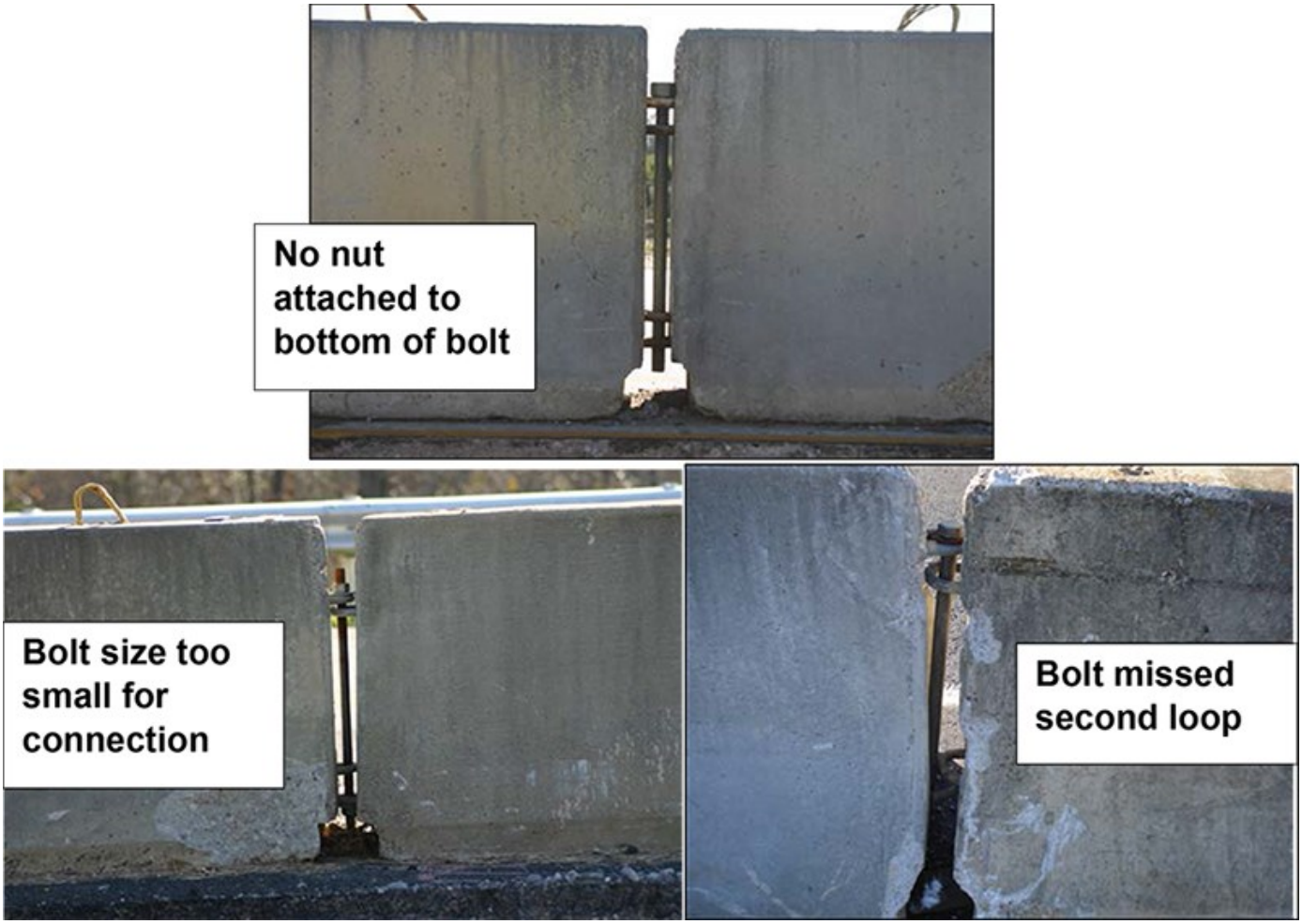

Figure 8. Improper PCB pin connections *(source: Alabama Department of Transportation (ALDOT))*

Figure 9. Crash attenuator not properly attached to barrier *(source: TTI)*

Barricades and Signs

It is critical that barricades be constructed as shown in standard drawings so that they perform as intended if they are hit. Components should be connected using the hardware and sizes as depicted in approved plans or as fabricated by approved vendors. It is also important not to add lights or flags to the devices unless they were tested with those components and approved for use.

Proper placement of signs on either the barricade or sign support is very important. For example, rigid sign substrates installed on barricades should be attached to the top rail and extend above it. A sign that is successfully crash tested at a 5-foot mounting does not mean that it will be safe if mounted at a lower mounting height. Likewise, a temporary sign support successfully tested with a sign mounted at 12 to 18 inches above the ground does not mean that it will be crashworthy if the height of the sign is increased to 24 or 36 inches.

Components or devices other than what were crash tested and approved for attaching to the barricade should not be used. Also, barricades should not be placed back to back or combined in order to save materials or space (see Figure 10).

Figure 10. Improperly combining barricade elements *(source: TTI)*

Barricades and portable sign stands are designed and crash tested in isolation from each other. It is not known how they might interact if they are struck when placed very close together. It is likely that the devices will fracture differently than they would have if they were struck independently. For this reason, care should be taken to make sure that multiple devices are not aligned closely one behind the other such that they would all be hit together if impacted by an errant vehicle (see Figure 11).

Barricades should always be oriented perpendicular to traffic so an errant vehicle would impact it on the face of the barricade, the same manner it was crash tested. If a barricade is placed parallel to traffic (for example at a closed T-intersection) an errant vehicle might impact the barricade from the end and potentially allow the barricade panels to penetrate a windshield.

Figure 11. Barricades and signs should not be placed one immediately behind the other *(source: TTI)*

Even small changes from approved sign support and barricade construction standards may significantly alter how the device reacts when hit. For this reason, it is not acceptable to simply add signs to existing sign supports, as shown in Figure 12. If additional signs are needed, additional sign supports properly sized and located relative to other signs are required. It is also important that only sign substrate materials specifically

approved for use on specific supports be used, as differences in mass and fracture characteristics between substrates may alter the crashworthiness of a particular sign support system.

Figure 12. Improper additions of signs to supports *(source: TTI)*

Figure 12. Improper additions of signs to supports *(source: TTI)* **(Continued)**

Long-term wooden sign supports are often imbedded directly into the soil, similar to how many permanent signs in rural areas are installed. To be crashworthy, some of these posts must be weakened so that they will fracture at the correct location and allow the sign structure to behave as intended when hit. It is critical that field personnel installing the sign supports do not forget to drill the weakening holes when required. As shown in Table 2, 4x4 inch posts imbedded in soil do not require weakening holes, whereas larger sign supports require either 1.5-inch or 3-inch weakening holes located 4 inches and 18 inches above the soil and drilled perpendicular to the roadway. Failure by field personnel to drill these holes, as shown in Figure 13, creates an unsafe condition for motorists.

Table 2. Wood Sign Support Requirements for Weakening Holes

Post Size	Weakening Holes Required?	Hole Size	Hole Locations
4x4 inch	No	NA	NA
4x6 inch	Yes	1.5 inches	4 inches and 18 inches above ground
6x8 inch	Yes	3.0 inches	4 inches and 18 inches above ground
5-inch round timber*	Yes	2.0 inches	4 inches and 18 inches above ground

*tested in soilcrete (42-inch depth)

Figure 13. Illustration of 4x6-inch sign support without required weakening holes *(source: TTI)*

Devices should also be constructed and installed so that the sign height is correct relative to the height of the pavement, as well as relative to the bottom of the sign support. Also, the support should be constructed to appear upright from the perspective of the approaching driver, and should not be tilted to match the side slope as this will affect how the device will break apart if impacted. Figure 14 illustrates the use of sand bags to level the orientation of the support to oncoming traffic. Conversely, Figure 15 shows an improperly installed support oriented relative to the slope of the drainage ditch. Some proprietary X-footprint temporary sign supports have adjustable legs that can accommodate steep side slopes and keep the sign oriented properly.

Figure 14. Sand bags used to level a temporary sign support *(source: TTI)*

Figure 15. Sign supports improperly oriented relative to the pavement cross-section *(source: TTI)*

Barricades and sign support bases should be properly ballasted using sand bags. The amount of ballast needed will depend on the amount of wind that exists on the project to ensure that the device does not blow over. However, excessive ballasting should be avoided as it could cause vaulting or flipping of a small vehicle

if impacted (see Figure 16). Only as much ballast as is needed to resist wind loads should be used. Also, only sand bags can be used for ballast. Concrete or other solid construction materials must not be used because it can cause serious injury to vehicle occupants or workers if it is struck by an errant vehicle. Figure 17 illustrates improper use of concrete for support ballast. Materials such as concrete or rock should never be placed on top of channelizing drums or other devices either.

Figure 16. Excessive ballast of devices should be avoided *(source: TTI)*

Figure 17. Concrete or other construction materials must never be used for ballast of devices *(source: TTI)*

When a device is damaged, field personnel must decide whether to replace or repair it, and if the latter, how to properly repair it. It is important that repairs return the device to its original structural integrity. If structural components are broken, they should be replaced and not simply spliced together (see Figure 18). If signs have come detached, they should be reattached by the same methods and hardware as originally used rather than simply nailing the sign back on to the support, as shown in Figure 19. Signs should also not be attached

over existing signs on a support in an attempt to repurpose the support (Figure 20). Rather, the old sign should first be removed, and only replaced with the same type and size of sign.

Figure 18. Examples of improper sign support repairs *(source: TTI)*

Figure 19. Examples of improper reattachments of signs to temporary sign supports *(source: TTI)*

Figure 20. Signs should not be attached over existing signs on temporary sign supports *(source: TTI)*

The Manual on Uniform Traffic Control Devices (MUTCD) requires that temporary traffic control devices be removed or covered when work is not occurring and the devices are not needed. Some field personnel mistakenly believe it is sufficient to lay temporary sign support structures over on their side (Figure 21). However, work zone devices are not tested in this laid-over position. If struck, it is possible for parts of the skid to break loose and penetrate the windshield of the vehicle. For this reason, the support should be left in its upright position and either cover the sign or move the support completely out of the clear zone when it is not needed. It is acceptable to turn crashworthy portable sign supports 90 degrees when they are not needed, as they will have been crash tested in both a head-on and a parallel (turned 90 degrees) position prior to approval and deployment.

Figure 21. Temporary sign supports and barricades should not simply be laid over within the clear zone when not needed
(source: TTI)

Significant advances have been made in recent years to determine which work zone devices are crashworthy and which are not. Field personnel should regularly review the devices they use on a day-to-day basis, and ensure that what they are using meets current standards. Older devices, especially steel devices such as shown in Figure 22, should be replaced.

Figure 23 provides a simple checklist to assist field personnel in verifying that the work zone devices being used in the field are crashworthy.

Figure 22. Older steel temporary sign supports may not be crashworthy *(source: TTI)*

ENSURE THAT WORK ZONE DEVICES IN USE ARE CRASHWORTHY

Barriers:

- ✓ PCB sections that are to be anchored should utilize approved anchoring methods for asphalt or concrete
- ✓ PCB sections should be structurally sound, with no exposed reinforcing bar
- ✓ PCB sections should not have large chunks missing on the top or bottom that could snag a vehicle
- ✓ PCB connection rebar should be structurally sound, and all section connections should be appropriately installed with proper hardware
- ✓ Barrier ends should be shielded with proper crash cushions or impact attenuators properly attached to the barrier
- ✓ Vehicles, equipment, and materials should not be stored near barrier ends or closer than the lateral deflection distance of the barrier that is in place in the work zone
- ✓ If water-filled barrier is to be used, **ensure that it is truly a barrier and is installed correctly**, as many devices look similar but do not behave as a barrier when struck

Other Work Zone Devices:

- ✓ Barricades and sign supports should be constructed as detailed in standard drawings, and not modified in any way
- ✓ Flags and lights should only be attached to devices if they have been crash tested and/or approved by an engineer for use
- ✓ Proprietary sign stands should be deployed according to the manufacturer's instructions.
- ✓ Barricades and sign supports should not be placed back to back where an errant vehicle could hit multiple devices at the same time
- ✓ Signs should not be attached to the back of existing sign supports unless they have been crash tested and approved for use in that configuration
- ✓ Barricades and sign supports should be aligned with the pavement surface and not tilted to match the roadside cross slope
- ✓ Work zone devices should not be overly ballasted with sand bags
- ✓ Concrete, rocks, or other construction material should not be used for ballasting work zone devices
- ✓ Repairs to work zone devices should completely replace broken components rather than simply splicing them back together
- ✓ Signs should be reattached as specified in standard drawings and not simply nailed back on a support that was damaged, or on to another support that was designed for a different sign
- ✓ Signs should not be attached over existing signs on a temporary sign support or barricade
- ✓ Older sign supports that are not known to be crashworthy should be replaced with newer, crashworthy versions

Figure 23. Checklist for ensuring work zone devices remain crashworthy in the field.

For More Information …

Recommended Procedures for the Safety Performance Evaluation of Highway Features. NCHRP Report 350. 1993. Accessible at http://onlinepubs.trb.org/onlinepubs/nchrp/nchrp_rpt_350-a.pdf.

Manual for Assessing Safety Hardware. American Association of State Highway and Transportation Officials. 2016. Accessible at https://bookstore.transportation.org/item_details.aspx?ID=2707.

Sheikh, N.M., R.P. Bligh, and W.L. Menges. *Crash Testing and Evaluation of the 12-ft Pinned F-Shape Temporary Barrier.* Report No. 405160-3-1. Texas A&M Transportation Institute, College Station, TX. April 2012. Accessible at http://www.roadsidepooledfund.org/wp-content/uploads/2012/09/405160-3-12arev2012.pdf.

English Detail Drawing for Positive Protection Anchoring Methods. Division of Highways, North Carolina Department of Transportation, Raleigh, NC. January 2012. Accessible at https://connect.ncdot.gov/resources/Specifications/2012%20Roadway%20Standard%20Drawings/Division%2011%20-%20Work%20Zone%20Traffic%20Control.pdf.

Temporary Concrete Barrier. Standard Sheet 619-01. State of New York Department of Transportation, Albany, NY. Accessible at https://www.dot.ny.gov/main/business-center/engineering/cadd-info/drawings/standard-sheets-us-repository/619-01_010611e1.pdf.

Schmidt, J.D. et al. *Analysis of Existing Work Zone Devices with MASH Safety Performance Criteria*. Report No. TRP-03-225-10. Midwest Roadside Safety Facility, Nebraska Transportation Center, University of Nebraska-Lincoln, Lincoln, NE. February 2009. Accessible at http://publications.iowa.gov/14961/1/IA_DOT_SWZDI_TPF5-081_Schmidt_MASH_report_red.pdf.

Quality Standard for Work Zone Traffic Control Devices. The Illinois State Toll Highway Authority, Downers Grove, IL. Accessible at https://www.illinoistollway.com/documents/20184/473059/Tollway_Quality+Standard+for+Work+Zone+Traffic+Control+Devices_06232014.pdf/e88dbcec-504d-4635-8bbc-ed616d55d577?version=1.0.

Portable Concrete Barriers Quality Specification. Special Provision 2533. Minnesota Department of Transportation, St. Paul, MN. Accessible at http://www.dot.state.mn.us/const/wzs/documents/pcb_quality_spec.pdf.

Construction Manual. Bureau of Construction, Alabama Department of Transportation, Montgomery, AL. Accessible at https://www.dot.state.al.us/conweb/pdf/Construction%20Manual.pdf.

This material is based upon work supported by the Federal Highway Administration under Grant Agreement DTFH61-13-H-00025.

Work Zone Safety Consortium

(202) 289-4434

Together, we represent all segments of the roadway construction industry.

AMERICAN ROAD AND TRANSPORTATION BUILDERS ASSOCIATION (ARTBA)
www.artba.org
(202) 289-4434

INTERNATIONAL UNION OF OPERATING ENGINEERS (IUOE)
www.iuoe.org

COMMUNITY COLLEGE CONSORTIUM FOR HEALTH AND SAFETY TRAINING (CCCHST)
http://www.hmtri.org/ccchst/ccchst_index.html

NATIONAL ASPHALT PAVEMENT ASSOCIATION (NAPA)
www.asphaltpavement.org

NATIONAL LOCAL TECHNICAL ASSISSTANCE PROGRAM ASSOCIATION
http://www.nltapa.org

FEDERAL HIGHWAY ADMINISTRATION
U.S. Department of Transportation
www.fhwa.dot.gov

AMERICAN ASSOCIATION OF STATE HIGHWAY AND TRANSPORTATION OFFICIALS (AASHTO)
www.transportation.org

TEXAS A&M TRANSPORTATION INSTITUTE (TTI)
tti.tamu.edu

FOF COMMUNICATIONS
Washington DC
www.fofcom.com